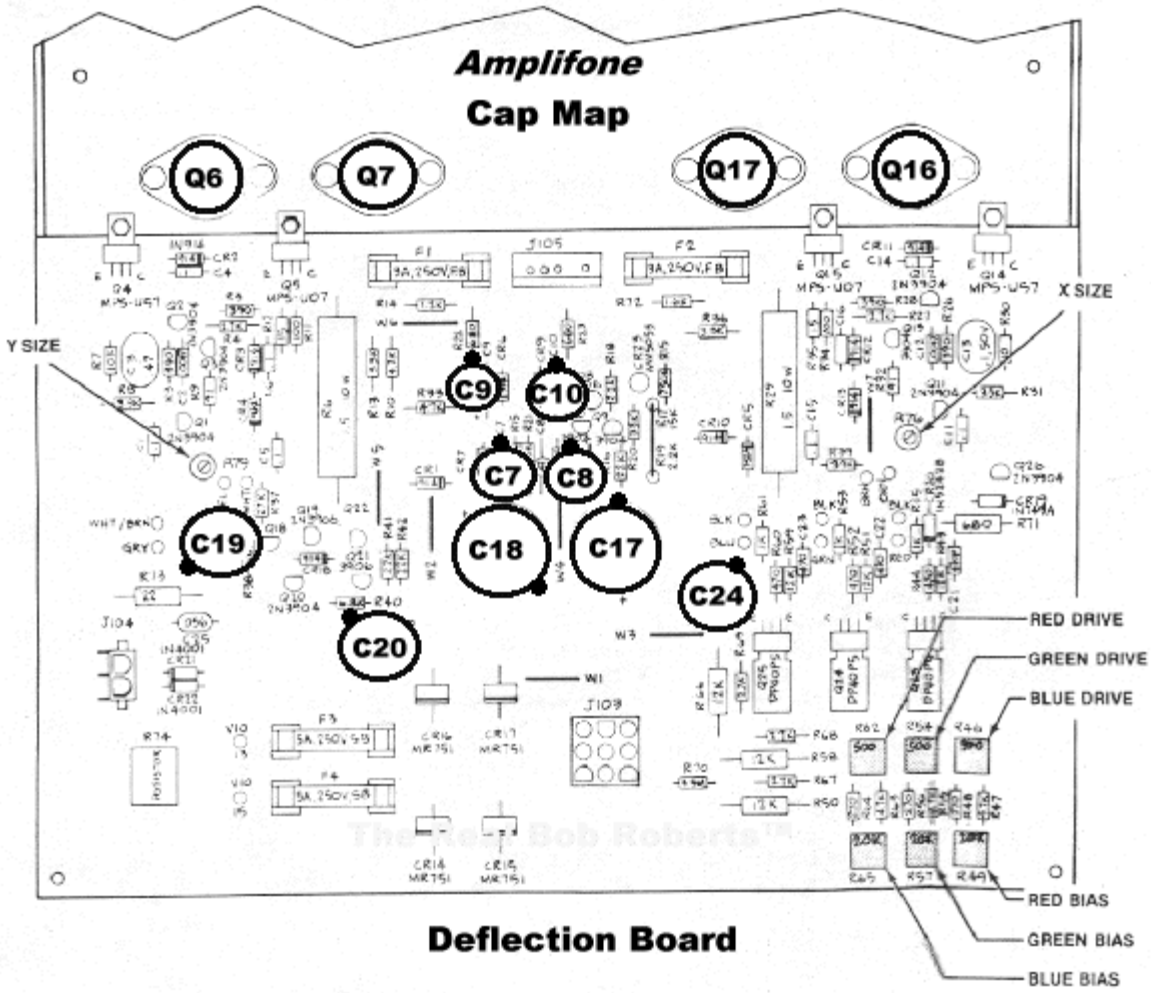
Amplifone
Cap Map
Q6
Q7
Q17
Q16
Y SIZE
X SIZE
C9
C10
C7
C8
C19
C18
C17
C24
C20
RED DRIVE
GREEN DRIVE
BLUE DRIVE
RED BIAS
GREEN BIAS
BLUE BIAS
Deflection Board

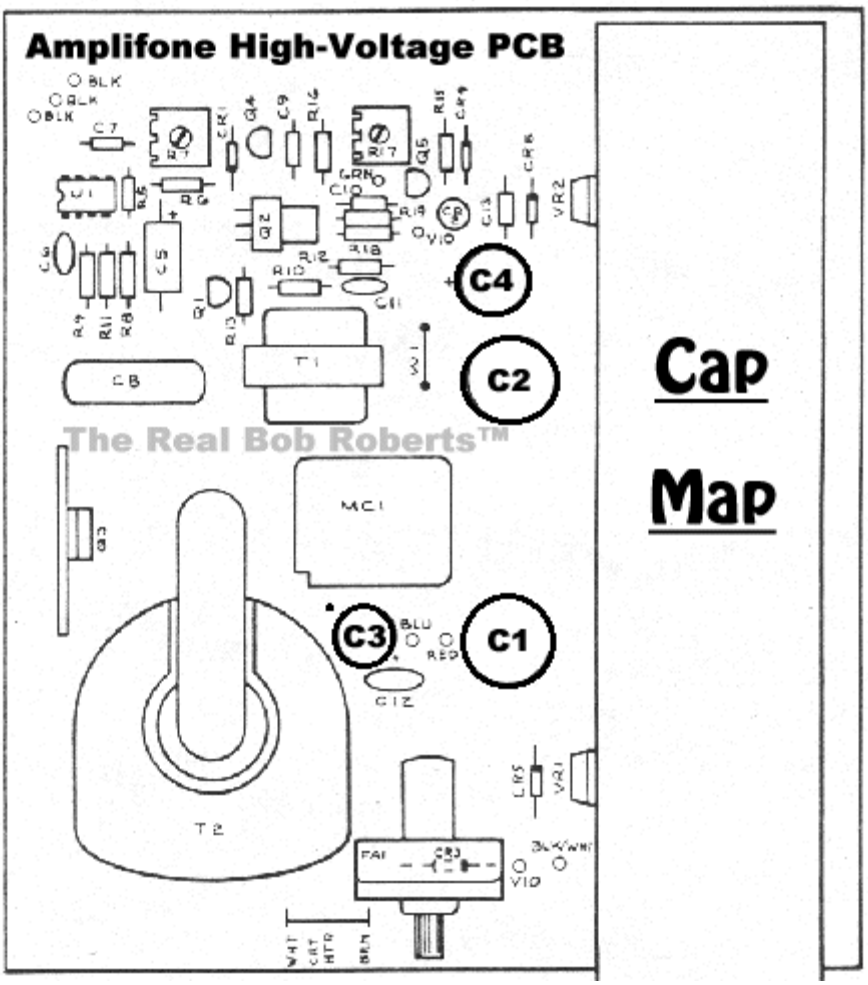
Amplifone High-Voltage PCB
C4
C2
C3
C1
T1
T2
MC1
The Real Bob Roberts™
Cap
Map

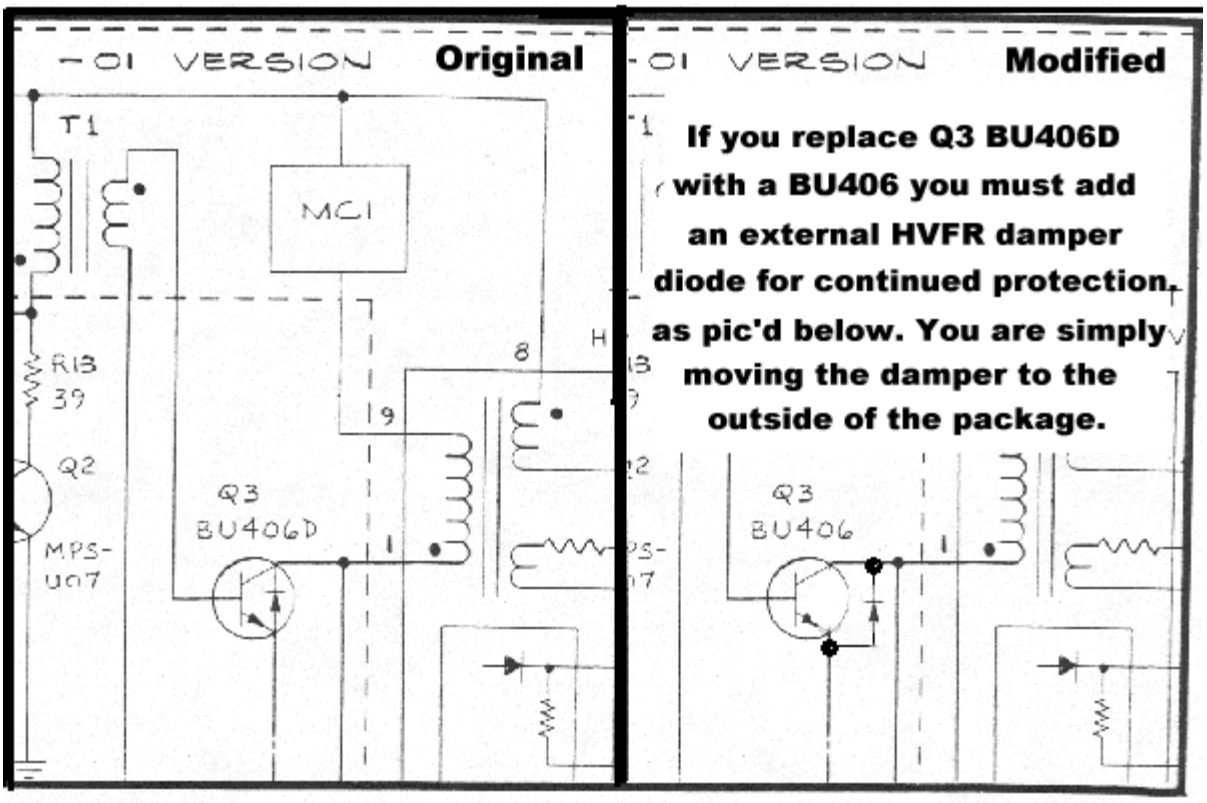
-01 VERSION
Original
T1
MC1
R13
39
Q2
MPS-
U07
Q3
BU406D
8
9
1
-01 VERSION
Modified
If you replace Q3 BU406D
with a BU406 you must add
an external HVFR damper
diode for continued protection,
as pic'd below. You are simply
moving the damper to the
outside of the package.
Q3
BU406
1